OWLS: A Mixed-Signal ASIC for Optical Wire-Less Links In Space Instruments

J. Ceballos-Cáceres
A. Ragel-Morales
B. Piñero-García
M. Muñoz-Díaz
S. Sordo-Ibáñez
A. Arias-Drake
J. M. Mora-Gutiérrez
M. A. Lagos-Florido
J. Ramos-Martos
S. Espejo-Meana

Ignacio Arruego
Javier Martínez-Oter
María Teresa Álvarez

E: espejo@imse-cnm.csic.es
T: +34 954 46 66 66

Index

- Motivation
- System Description
  - ✓Front-end
  - ✓Filter Banks
  - ✓gm-tuning
  - ✓Voltage regulators
  - ✓Decision stage
  - ✓LED-driver
- Space-Specific Measures
- Packaging
- Summary & Future Work
- Experimental Results

Motivation

- Digital transceiver for diffuse-light intra-satellite asynchronous optical communications
- Baseband and subcarrier-modulation transmissions
- Technology: Austriamicrosystems (AMS) 0.35µm CMOS
- TID tolerance: to be maximized. Strict minimum of 50Krads
- SEU and SET LET-thresholds above 70MeV/(mg/cm2)
- Latch-up free behavior up to 70MeV/(mg/cm2)
- Temperature operation range: -90 to +125ºC
- Non-operating temperature range: -135 to +150ºC

System Description (I)

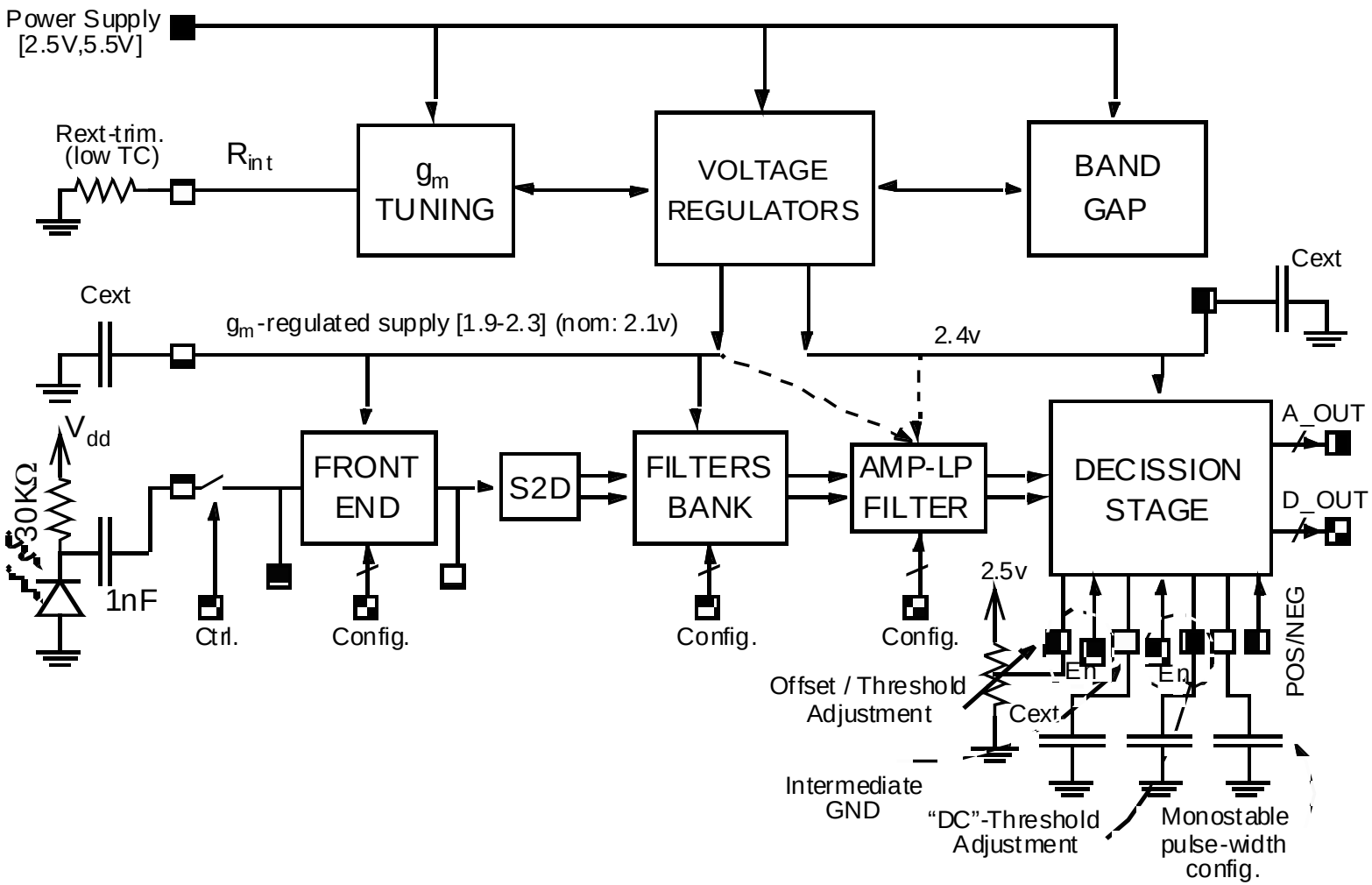

System Description (II)

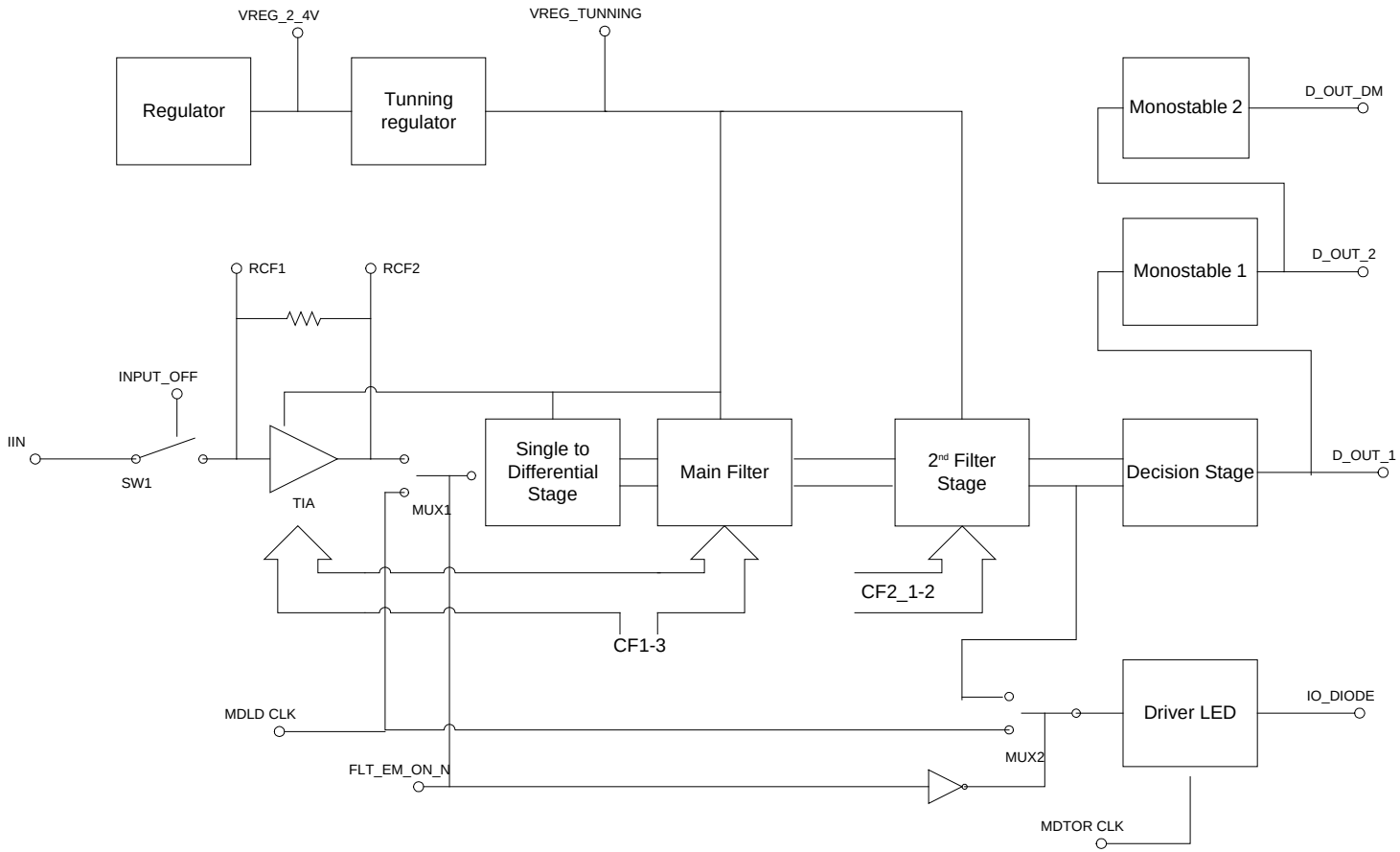

Front End

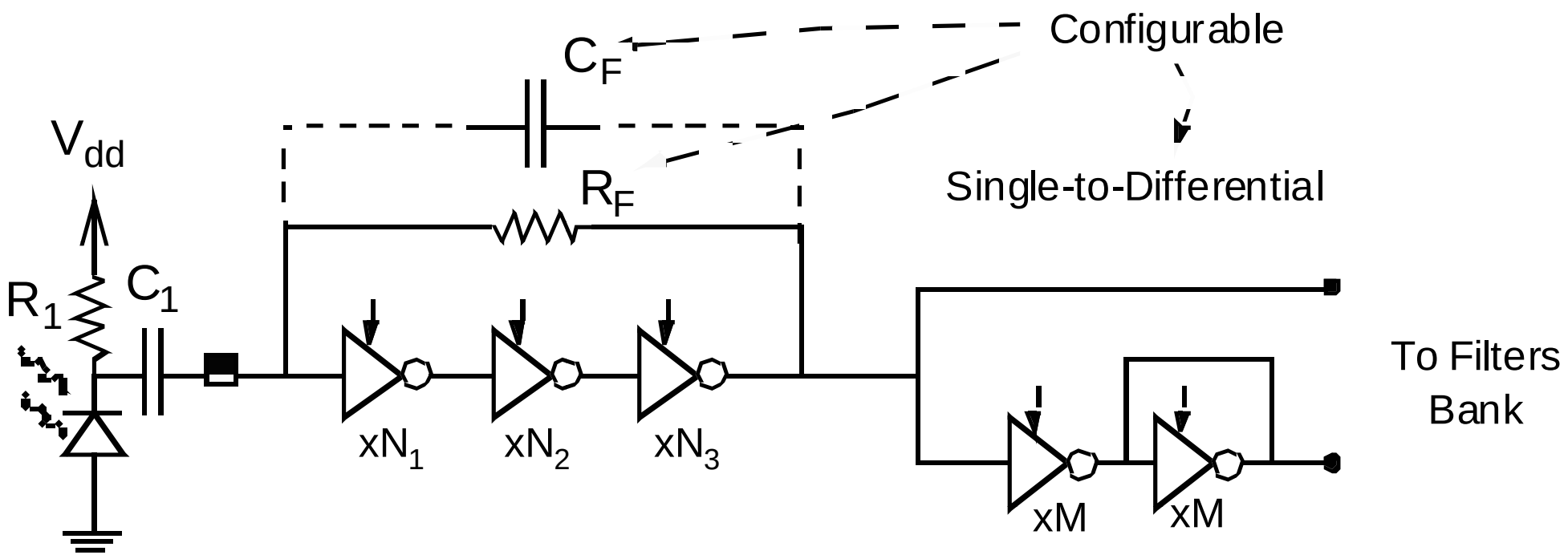
Configurable
C_F
V_{dd}
R_F
Single-to-Differential
R_1
C_1
xN_1
xN_2
xN_3
To Filters Bank
xM
xM

Filter Banks

- Fully-differential Gm-C techniques
- Nauta/Bourdel transconductors, double-poly caps

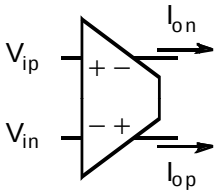

Main filter bank

CFG3	CFG2	CFG1	Type	Band
0	0	0	Low-pass	DC-1MHz
0	0	1	Low-pass	DC-8MHz
0	1	0	Low-pass	DC-20MHz
0	1	1	-	Short (*)
1	0	0	Band-pass	Fc=500kHz, BW=210kHz
1	0	1	Band-pass	Fc=1.65MHz, BW=500kHz
1	1	0	Band-pass	Fc=5.4Mhz, BW=1.5MHz
1	1	1	Band-pass	Fc=18.2MHz,BW=3.3MHz

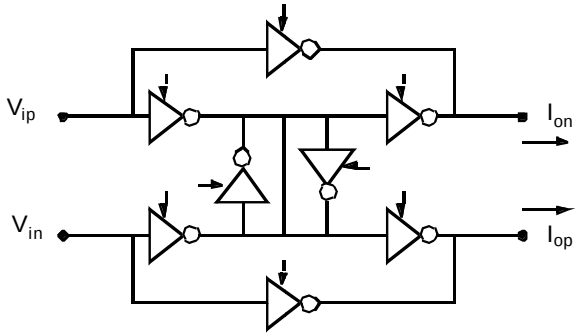

Second filter-bank

CFG2_2	CFG2_1	Band
0	0	2MHz
0	1	10MHz
1	0	20MHz
1	1	Disabled

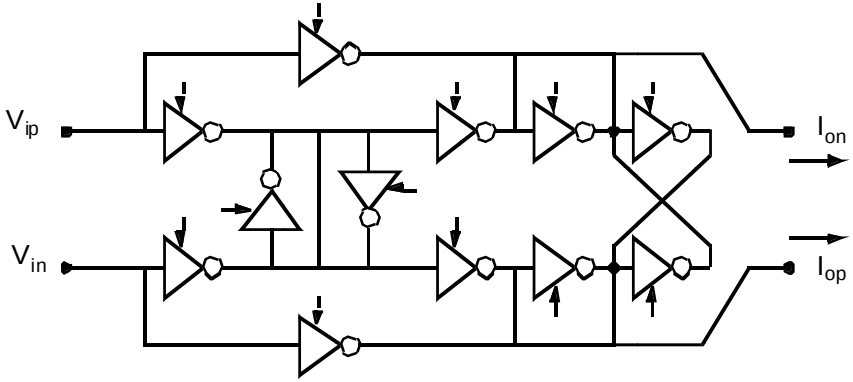

Gm-Tuning

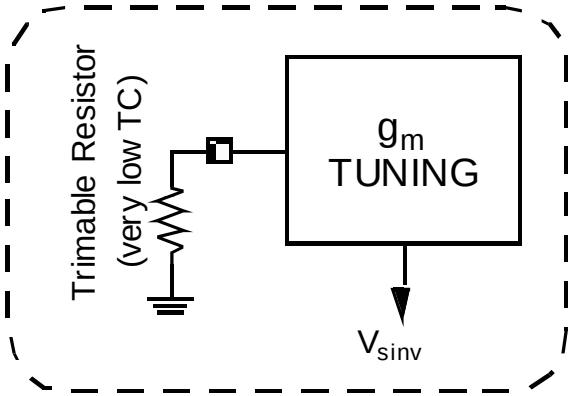

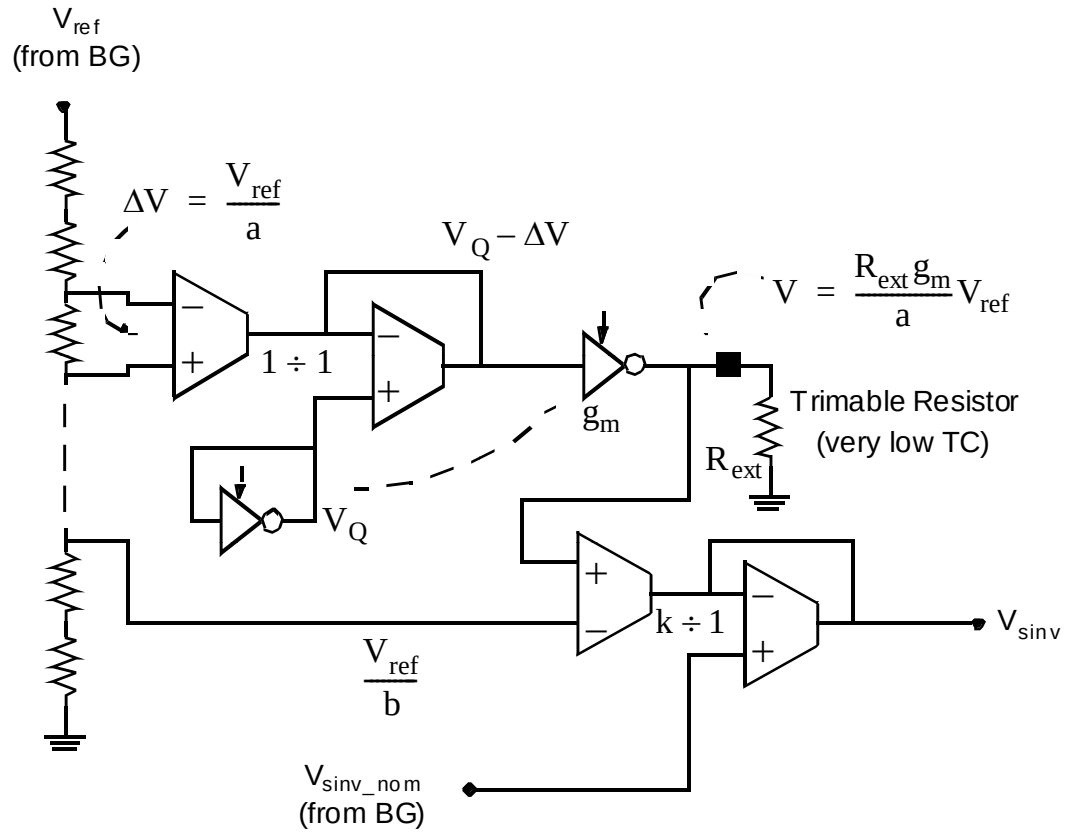

$$\frac{R_{ext} g_m}{a} V_{ref} - \frac{V_{ref}}{b} = 0 \quad \rightarrow \quad R_{ext} g_m = \frac{a}{b}$$

Voltage Regulators

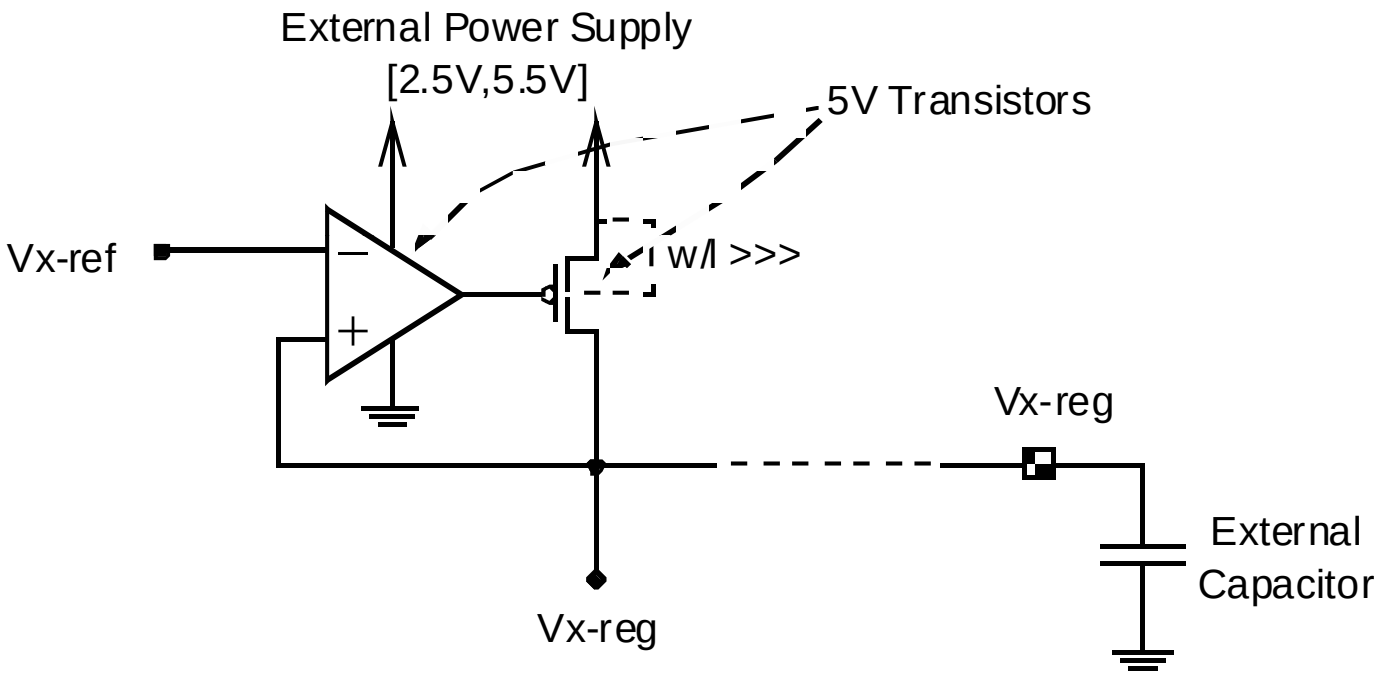

Decision Stage

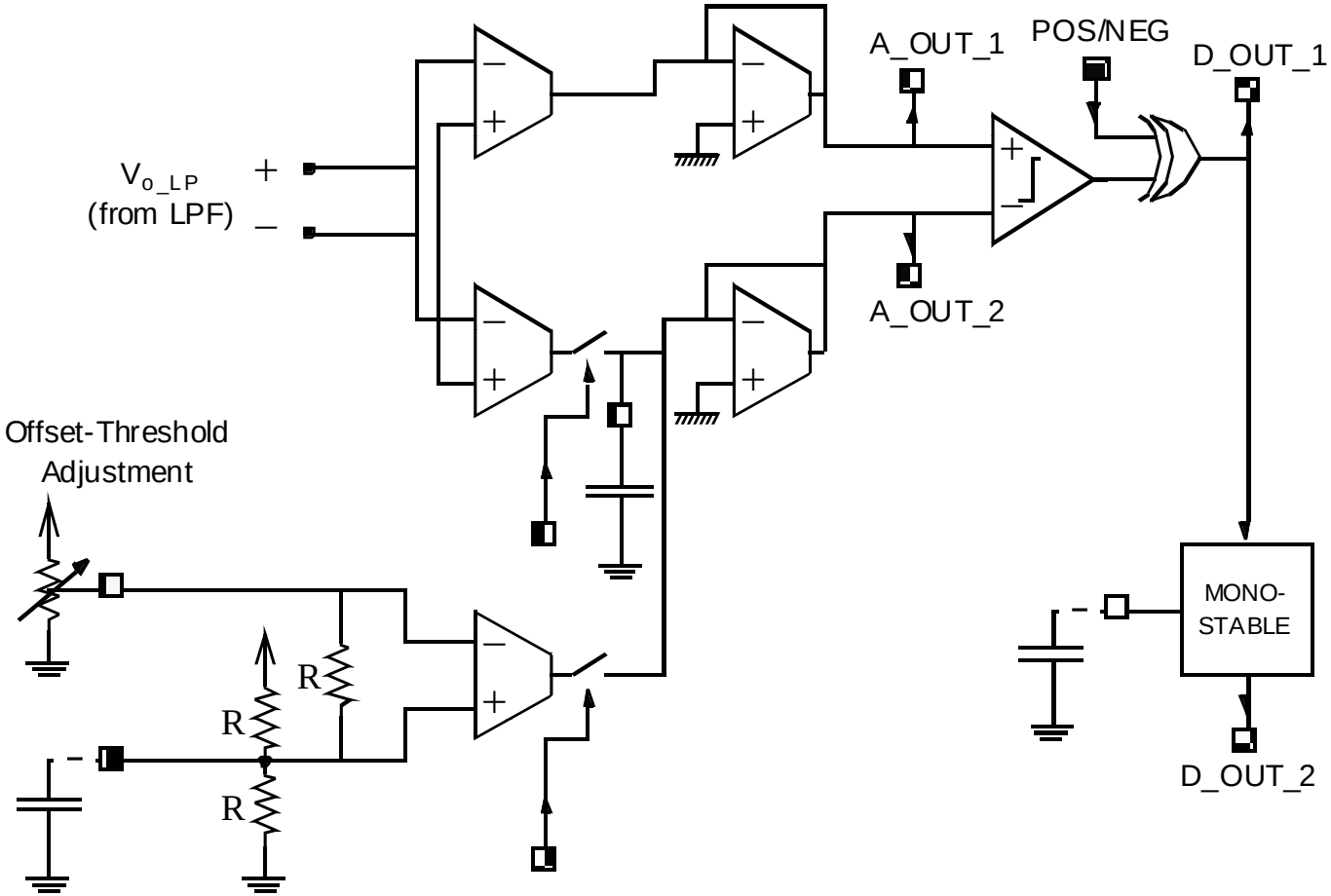

Driver

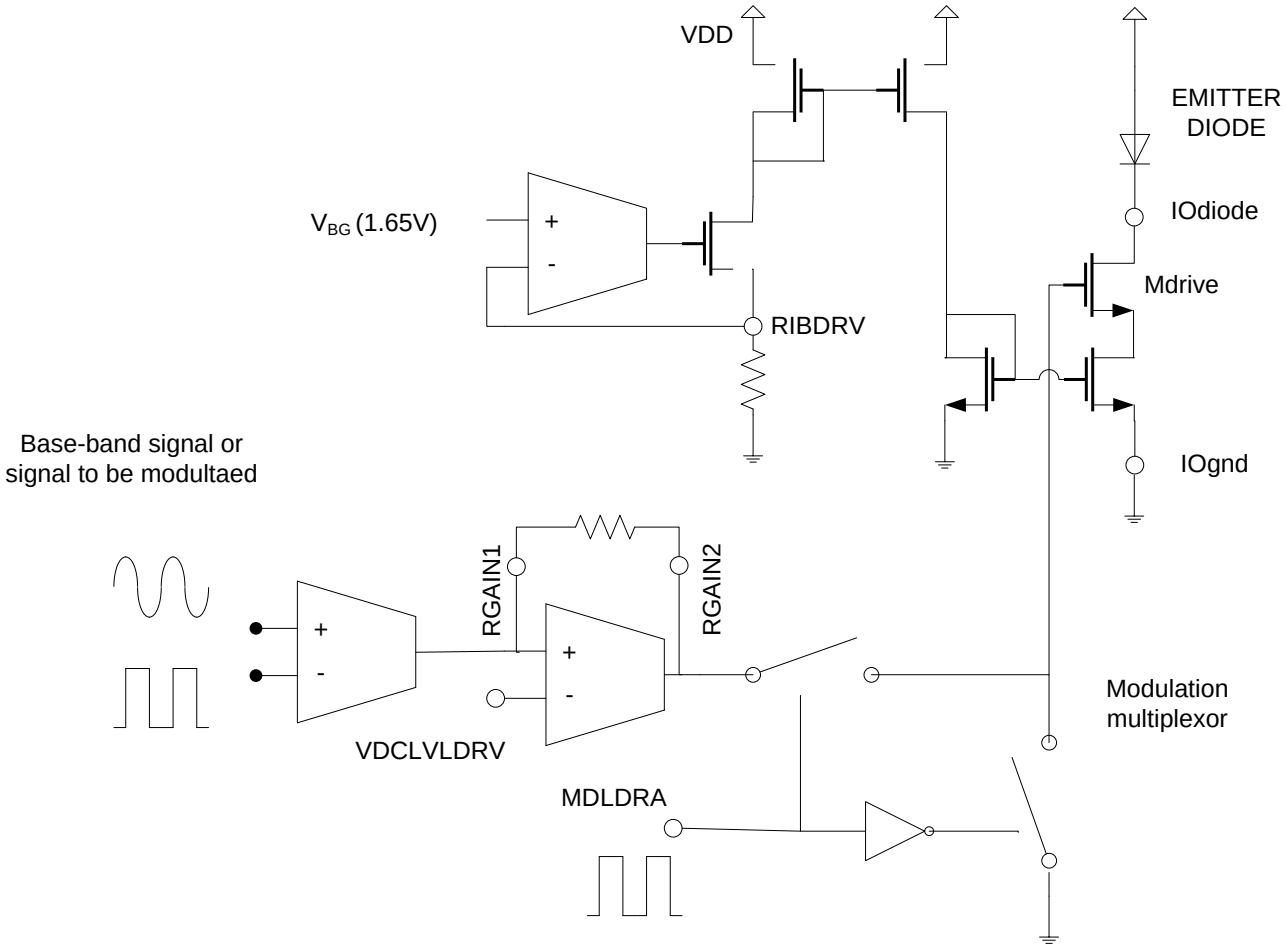
VDD
EMITTER DIODE
IOdiode
V_{BG} (1.65V)
+
-
Mdrive
RIBDRV
Base-band signal or signal to be modultaed
IOgnd
RGAIN1
RGAIN2
+
-
+
-
Modulation multiplexor
VDCLVLDRV
MDLDRA

Space-Specific Measures

- TID tolerance up to 300Krads, based on tech. charact.
- SEL free up to at least 70MeV/(mg/cm2), based on tech. charact.
- ELT layouts for nmos transistors. Standard layouts for pmos.
- Guard-rings around nmos and pmos transistors.

- Temperature: validation of foundry models in the extended temperature ranges, and electrical simulation

- Amendments in design kit for ELT transistors: symbols, equivalent conventional geometries for electrical simulation, extraction, and LVS.
- p-cells for ELT transistor layout generation

Packaging

KYOCERA JLCC44 (PB_F86079) ceramic package.

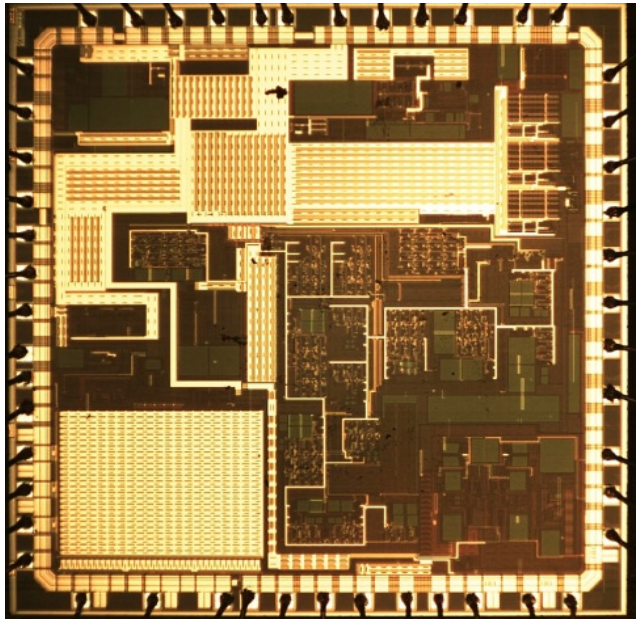

3.5 x 3.5 μm^2

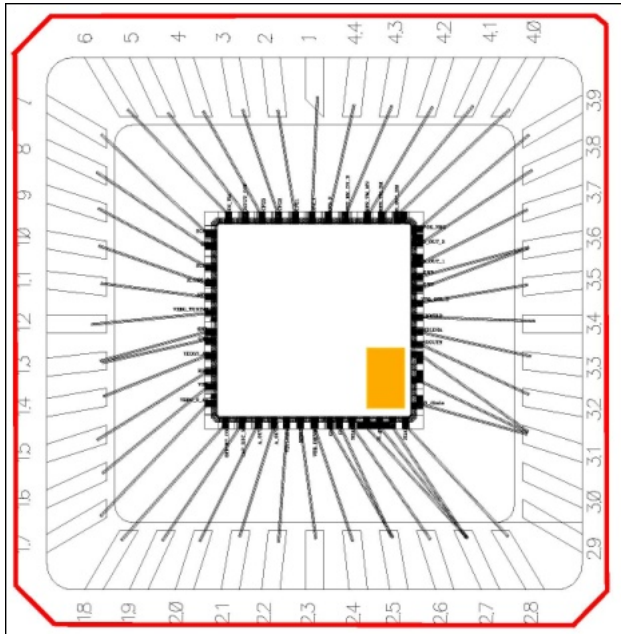

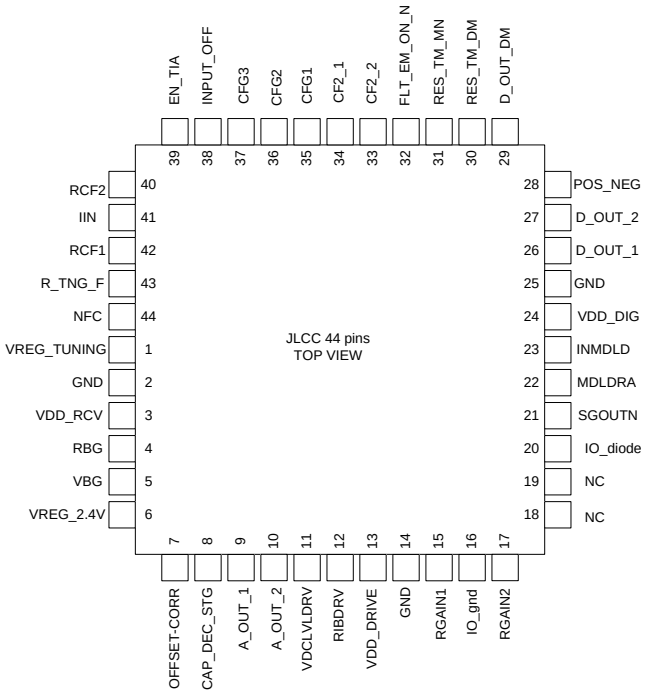

Experimental Results (I)

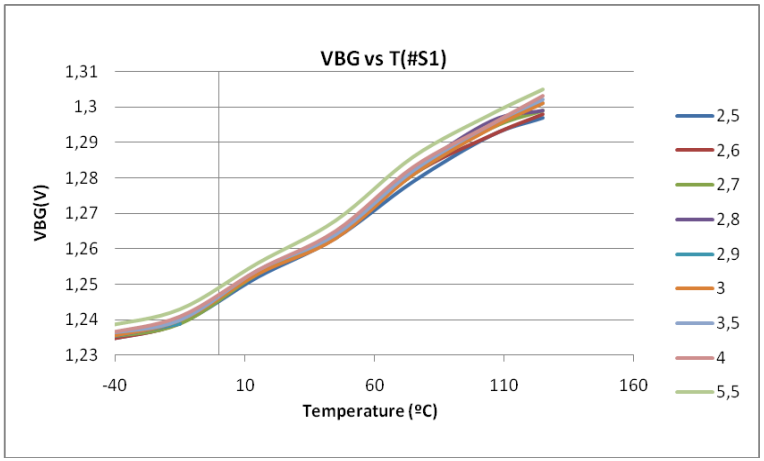

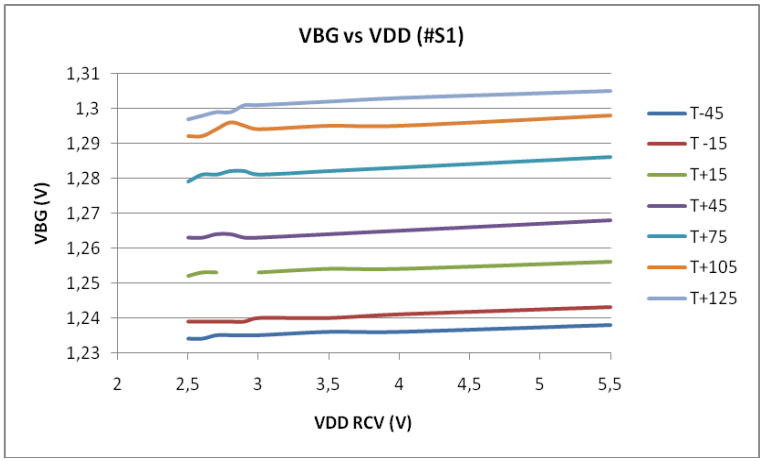

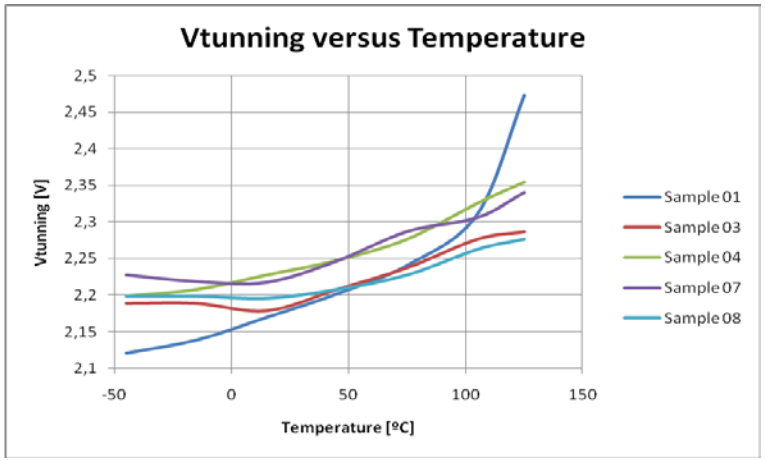

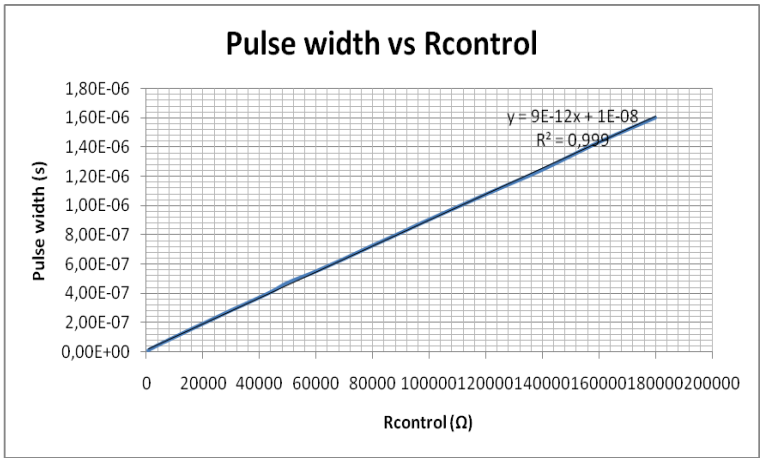

Experimental Results (II)

CFG=000

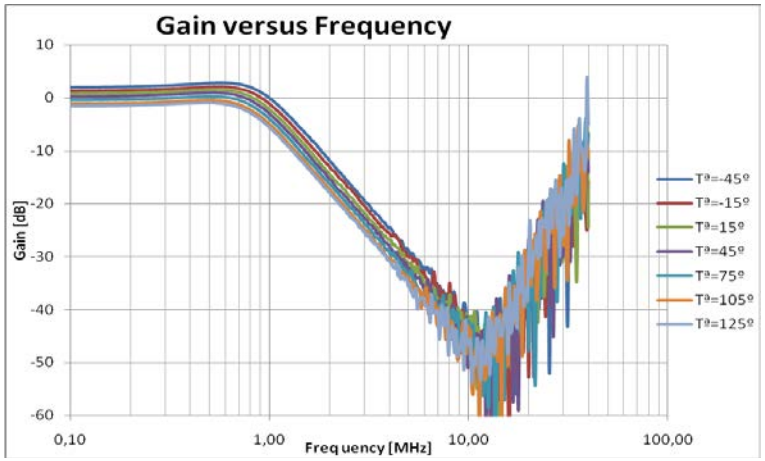

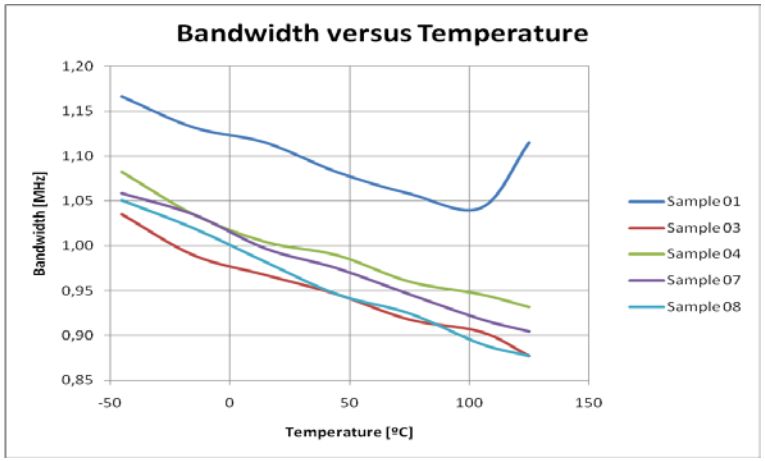

CFG=010

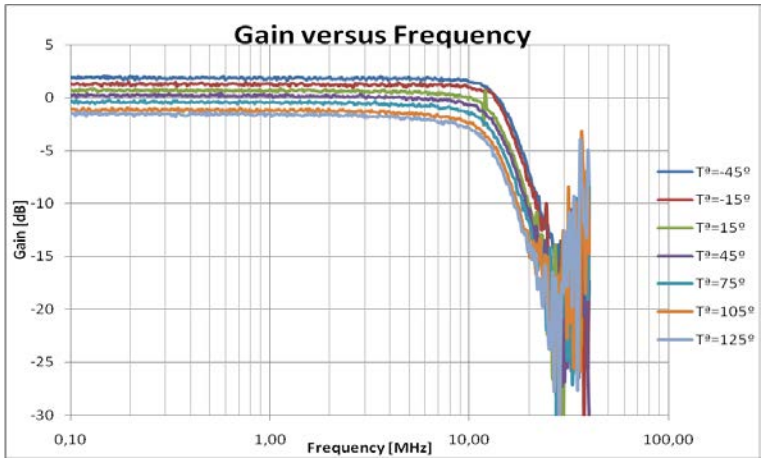

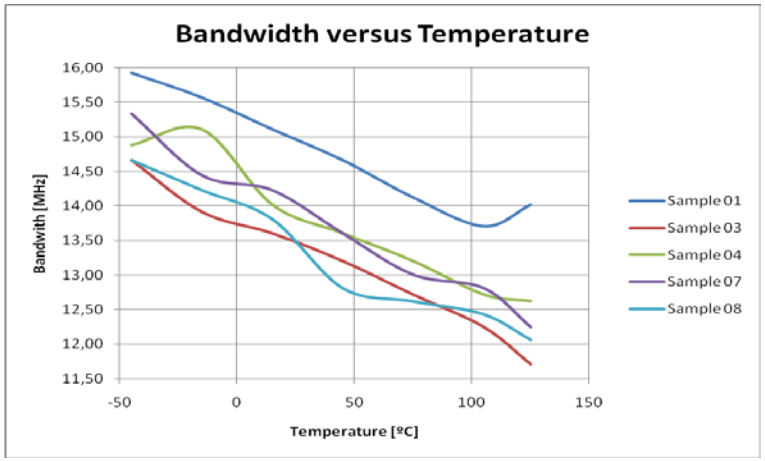

Experimental Results (III)

CFG=101

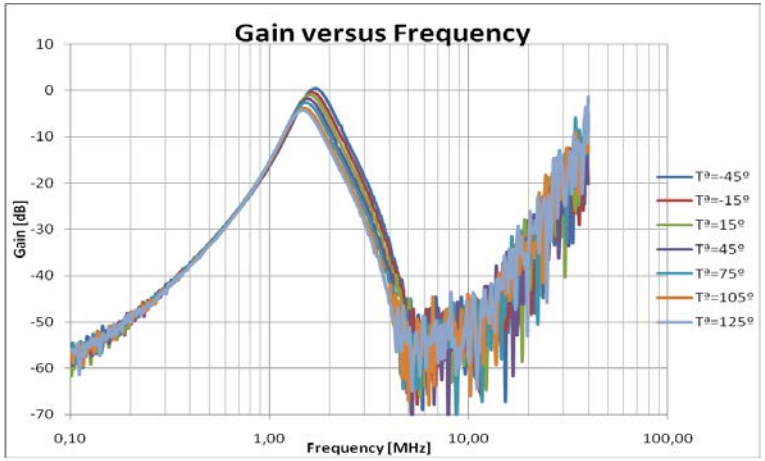

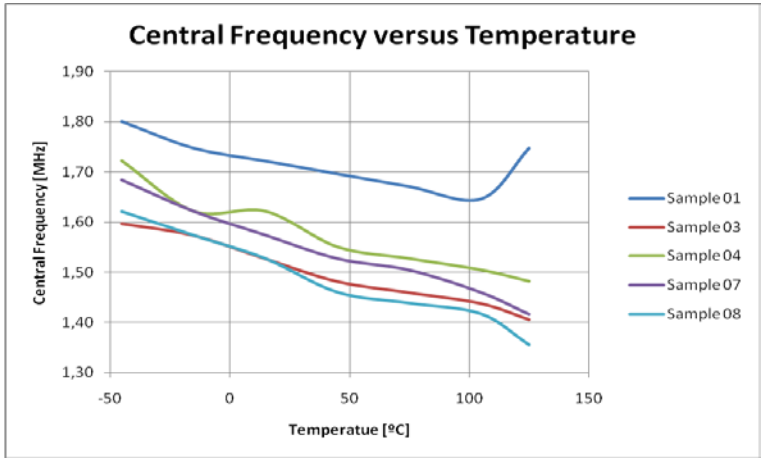

CFG=110

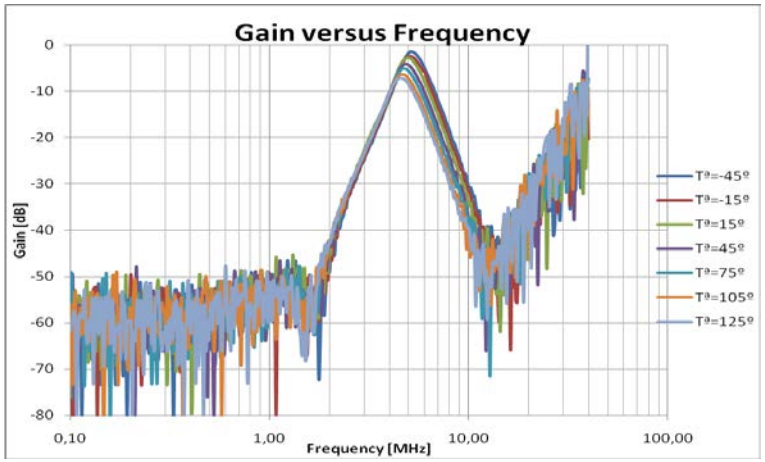

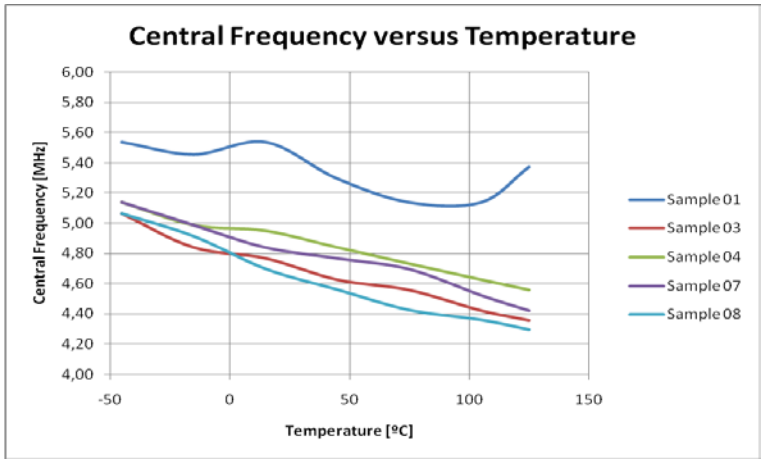

Experimental Results (IV)

- BER 10^{-8} @500KHz for 100nA amplitude pulse at the TIA input
- BER 10^{-8} @1MHz for 120nA amplitude pulse at the TIA input
- Correct operation of transmitter, although some degradation at high frequency
- Further measurements in progress

On-going & Future Work

- Real-application tests (with photo-diode & LED) to be performed at INTA and IMSE
- Preliminary qualification by ALTER Technology
- Irradiation tests planned for next quarter (TID & latch-up)
- Re-spin for deviations correction:
  - ✓Band-gap redesign
  - ✓Independent GNDs at the pad-ring for analog and digital sections
  - ✓Digital output current reduction (cross-talk)
  - ✓Emitter low-current section refinement for high frequency improvement
- Die thickness reduction for QFP packaging

- Additional chip being sent to foundry in the coming days: analog front-end bank (ADCs) for tri-axial AMR magnetometer, accelerometer, and temperature measurements. Includes digital section. Digital cells library partially developed.

Acknowledgements

- Work partially supported by “Plan Nacional de Investigación”. Ministerio de Ciencia e Innovación (MICINN), under project MEIGA (AYA2009-14212-C05-04 and AYA2008-06420-C04-02).

- We want to thank the technical staff of austriamicrosystems (ams) for their assistance in the use of their process

- People and institutions involved in the characterization of the technology (IMSE, INTA, USC, CNA, UCL) .