A COMPARITIVE STUDY OF THE MSI AND PROBA-V LINEAR ARRAYS UNDER THE INFLUENCE OF RADIATION

Jonas Bentell, Koen van der Zanden, Thierry Colin, Siegfried Herftijd, Patrick Merken, **Jan Vermeiren**

AMICSA workshop, ESTEC- Noordwijk, 28-08-2012

Xenics
Infrared Solutions

Overview

- Mission objectives
- FPA architecture
- ROIC designs
- Obtained results
  - TID
  - High and low E protons
  - Heavy ion
- Conclusions

Proba - V

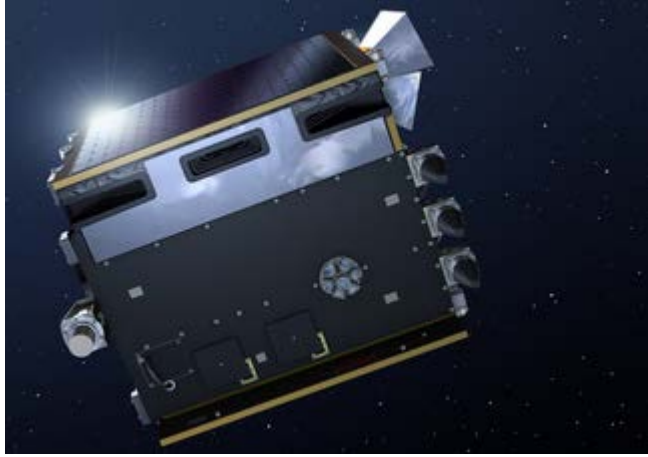

- Gapfiller

SPOT-Vegetation → Proba-V → Sentinel-3

- Daily monitoring > 35º
- 3 telescopes with 34º each.
- VNIR: 3-band multispectral linear CCD
  - 5200 pixels on 13 µm
  - or 67.6 mm

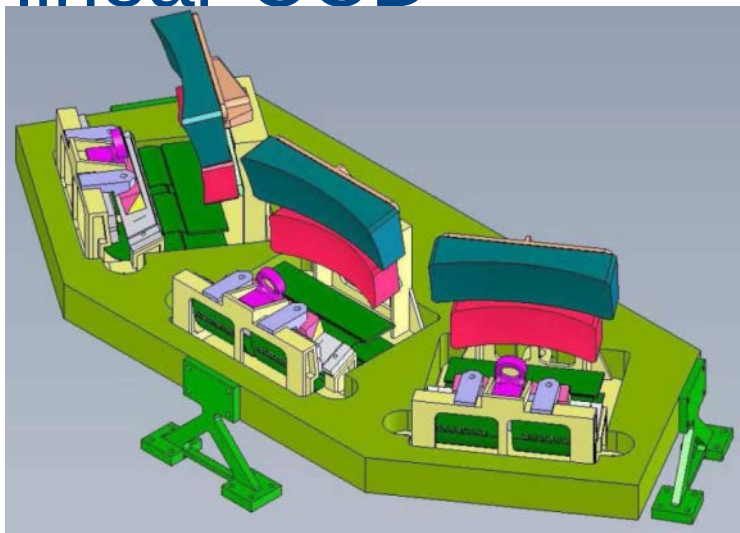

Earthcare

- ESA cornerstone mission
- Clouds & dust on Earth's radiation budget
- MSI: Multi-Spectral Imager
  - 4 VNS bands + 3 TIR bands(8.8, 10.8 & 12 µm)
- Swath width: 150 km
- Ground resolution: 500 m
- Co-registration: < 75 m

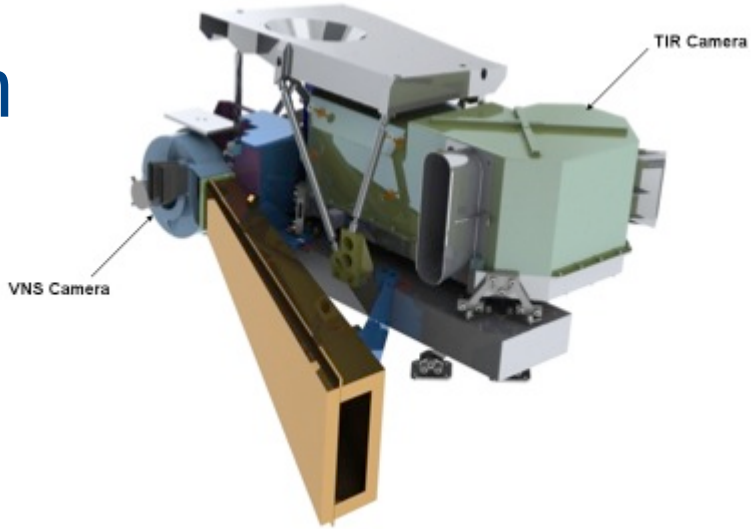

Overview

- Mission objectives
- FPA architecture
- ROIC designs
- Obtained results
  - TID
  - High and low E protons
  - Heavy ion
- Conclusions

Proba-V: XLIN-3000 architecture

- 3*1024 pixels – 25 µm pitch
- Mechanically butted with overlap

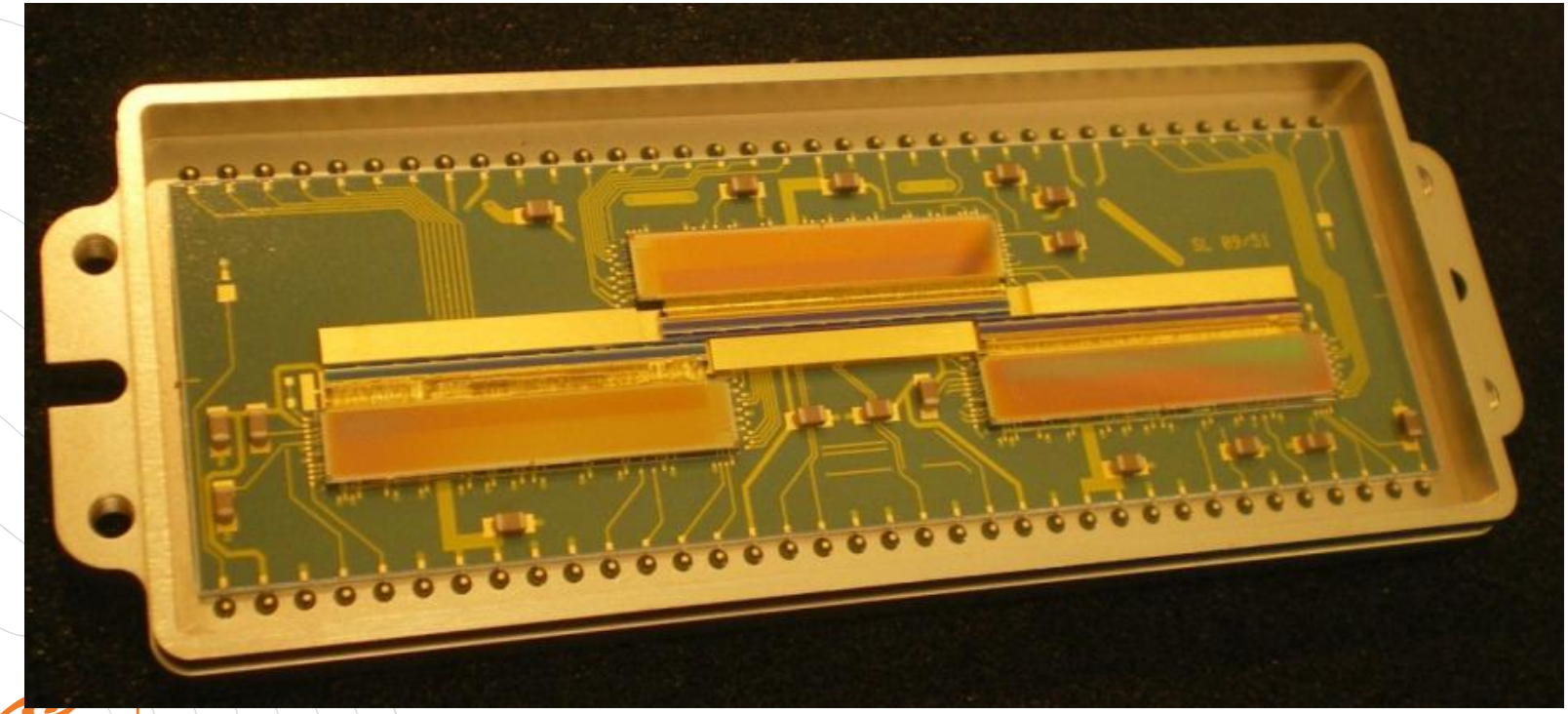

Proba-V: ROIC design

- CTIA: low lag, good linearity
- CDS: noise reduction
- 0.35 µm ON-Semi technology

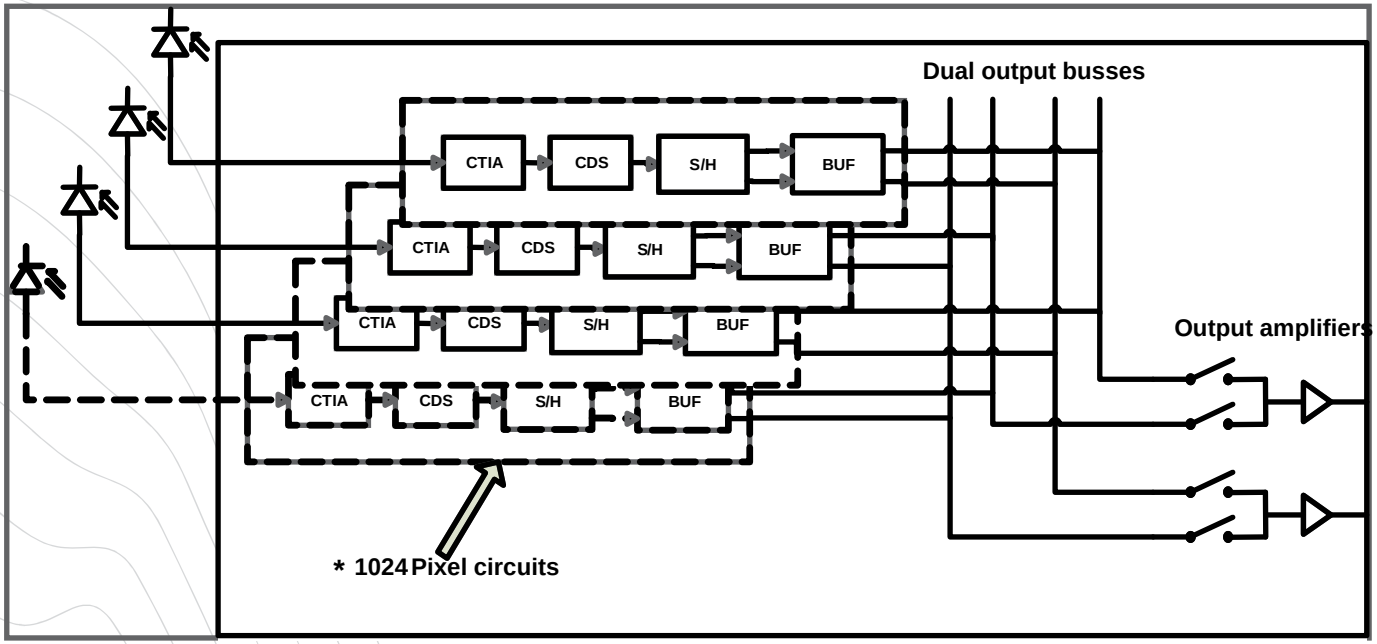

Proba-V: Performance

- Power: < 900 mW
- Sensitivity:
  - 0.19 and 32 µV/e^-
  - In 16 steps
- Noise level
  - [600 – 4200 e^-_{rms}]

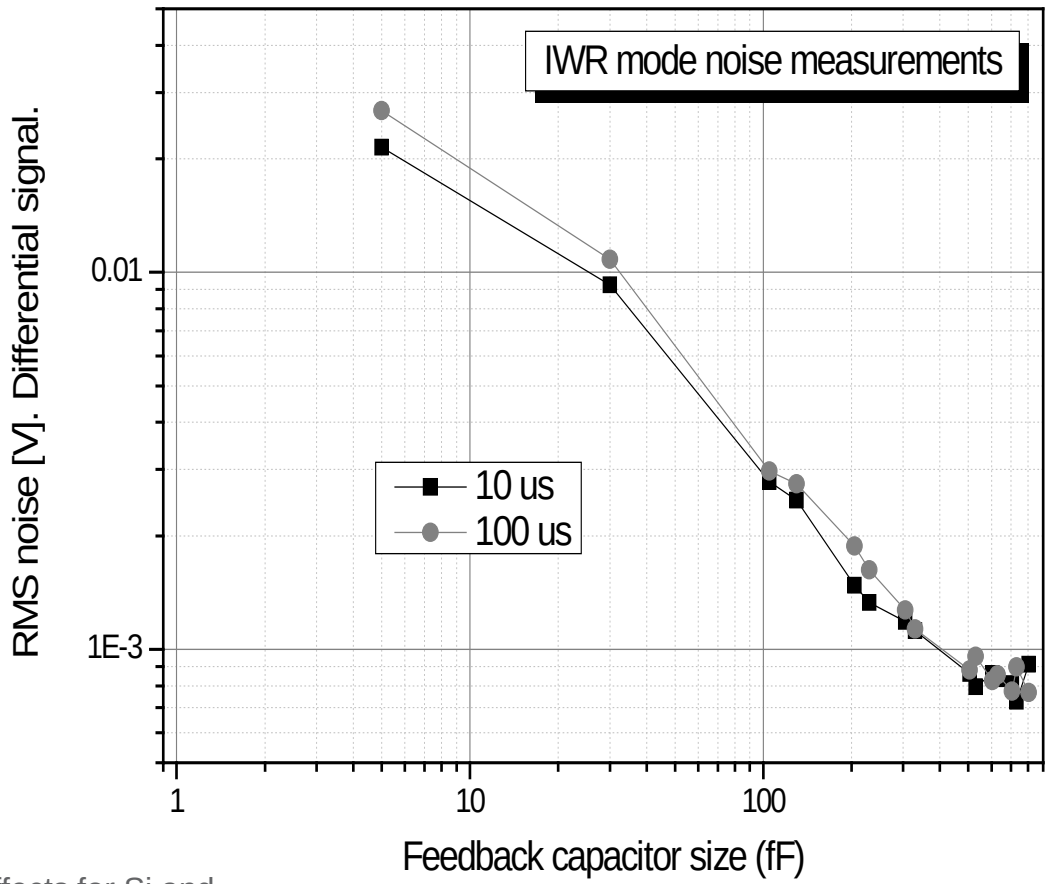

MSI: XLIN-512 architecture

- 512 pixels – 25 µm pitch with bilinear readout
- 4 different detector materials
- 0.5 µm ON-Semi technology

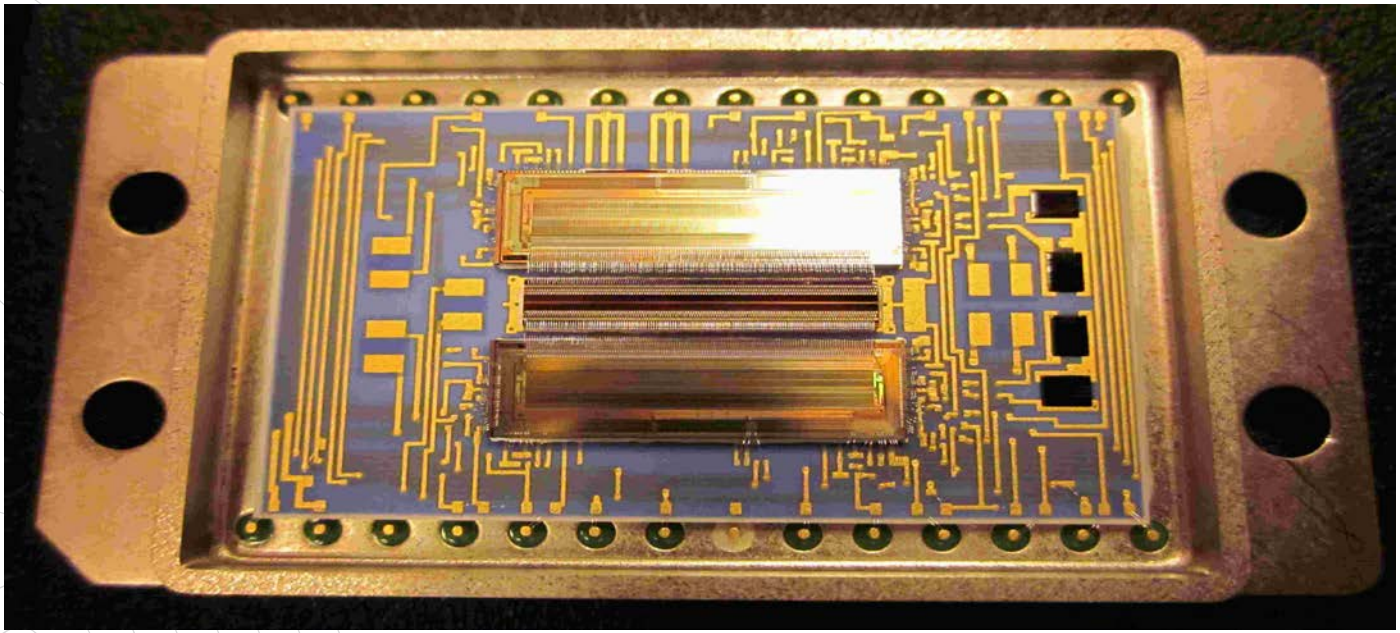

MSI: material selection

Channel	Wavelength [µm]	Material	$T_{detector}$	SNR @100%ρ_{ToA}
VIS	$0.67^{\pm 0.01}$	Si, p-on-n, 11.5 µm epi, optimized AR	Room temp	500
NIR	$0.865^{\pm 0.01}$	Si, p-on-n, 11.5 µm epi, optimized AR	Room temp	500
SWIR1	$1.55^{\pm 0.015}$	$In_{0.47}Ga_{0.53}As$ grown on InP	Room temp	250
SWIR2	$2.21^{\pm 0.015}$	Extended InGaAs on buffer layer	[230-240 K]	250

MSI: material selection

Channel	Wavelength	Material	Q E [%]	MTF [%]
VIS	$0.67^{\pm 0.01}$ µm	Si, p-on-n, 11.5 µm epi, optimized AR	80	52
NIR	$0.865^{\pm 0.01}$ µm	Si, p-on-n, 11.5 µm epi, optimized AR	56	47
SWIR1	$1.55^{\pm 0.015}$ µm	$In_{0.47}Ga_{0.53}As$ grown on InP	75	52
SWIR2	$2.21^{\pm 0.015}$ µm	Extended InGaAs on buffer layer	60	52

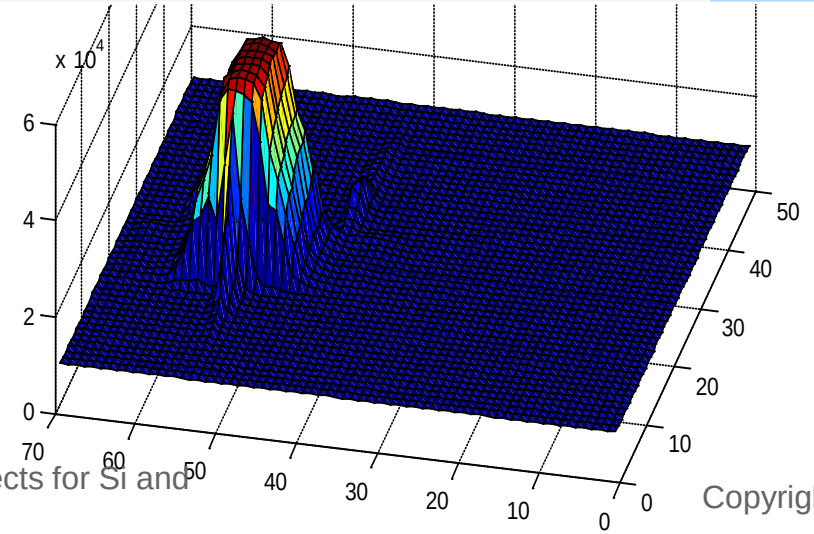

MSI: ROIC design

- CTIA: low lag, good linearity
- Autozero: bias offset reduction

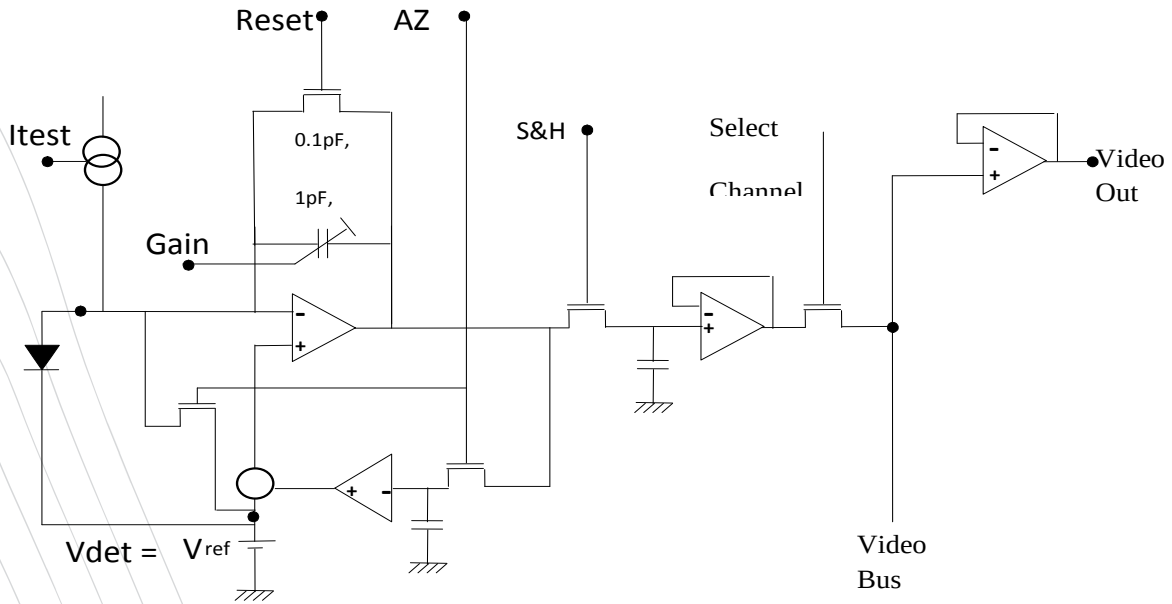

MSI: Performance

- Power: < 300 mW
- Sensitivity:
  - 1600, 160, 20 and 10 nV/e^-
- Noise level
  - [0.45 and 7 mV_{rms}]
  - [4400 – 45000 e^-_{rms}]
  - off-chip CDS for high gain

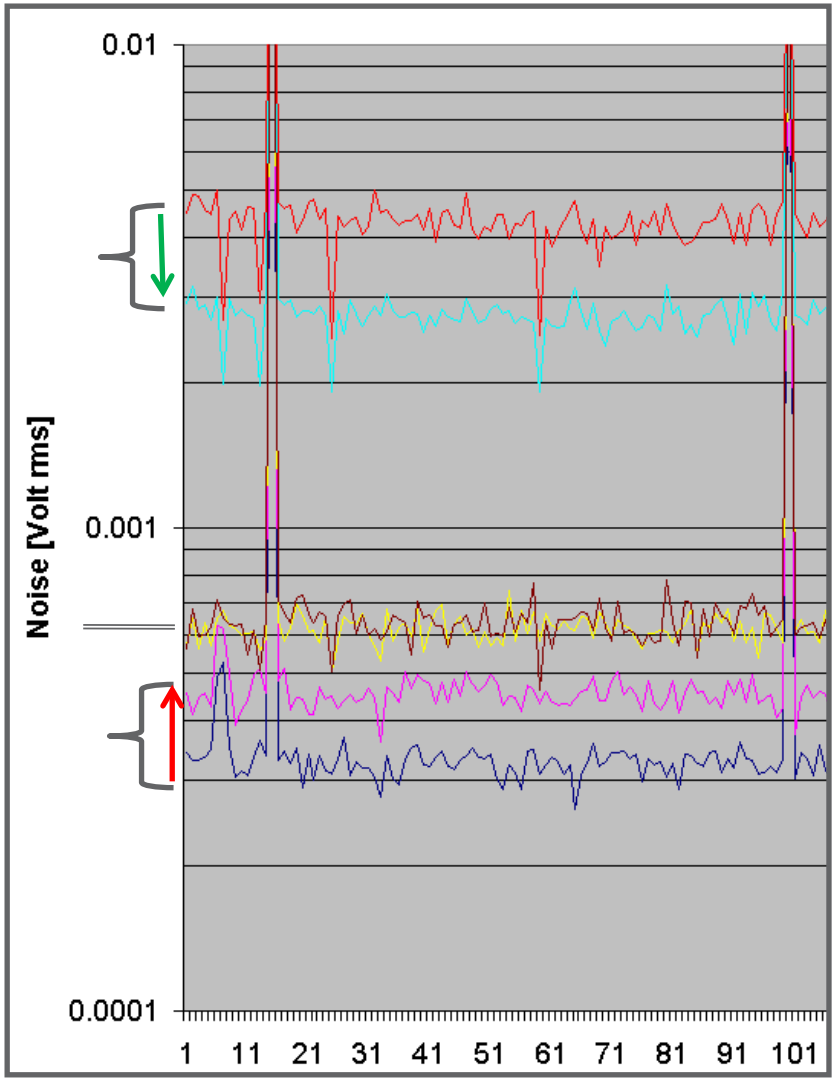

Overview

- Mission objectives
- FPA architecture
- ROIC designs
- Obtained results
  - **TID**
  - **High and low E protons**
  - **Heavy ion**
- Conclusions

Summary of radiation tests

Array type	^{60}Co	p^+	Heavy Ion
Proba-V SWIR1	ESTEC, Noordwijk, NL	KVI, Groningen, NL	HIF, UCL, B
MSI RED	ESTEC, Noordwijk, NL	KVI, Groningen, NL	
MSI NIR	ESTEC, Noordwijk, NL	KVI, Groningen, NL	
MSI SWIR1	SCK, Mol-B ESTEC, Noordwijk, NL	PROSCAN, PSI, CH KVI, Groningen, NL	HIF, UCL, B
MSI SWIR2	ESTEC, Noordwijk, NL ESTEC, Noordwijk, NL	PROSCAN, PSI, CH KVI, Groningen, NL	HIF, UCL, B

TID: test conditions

- Element: ^{60}Co
- Total dose: 10 krad(Si)
- Dose rate:
  - ESTEC: 1500 rad(Si)/h
  - SCK: 180 → 360 rad(Si)/h
- Observed parameters:
  - Dark current
  - Noise
  - Power dissipation
  - Linearity

TID: dark current

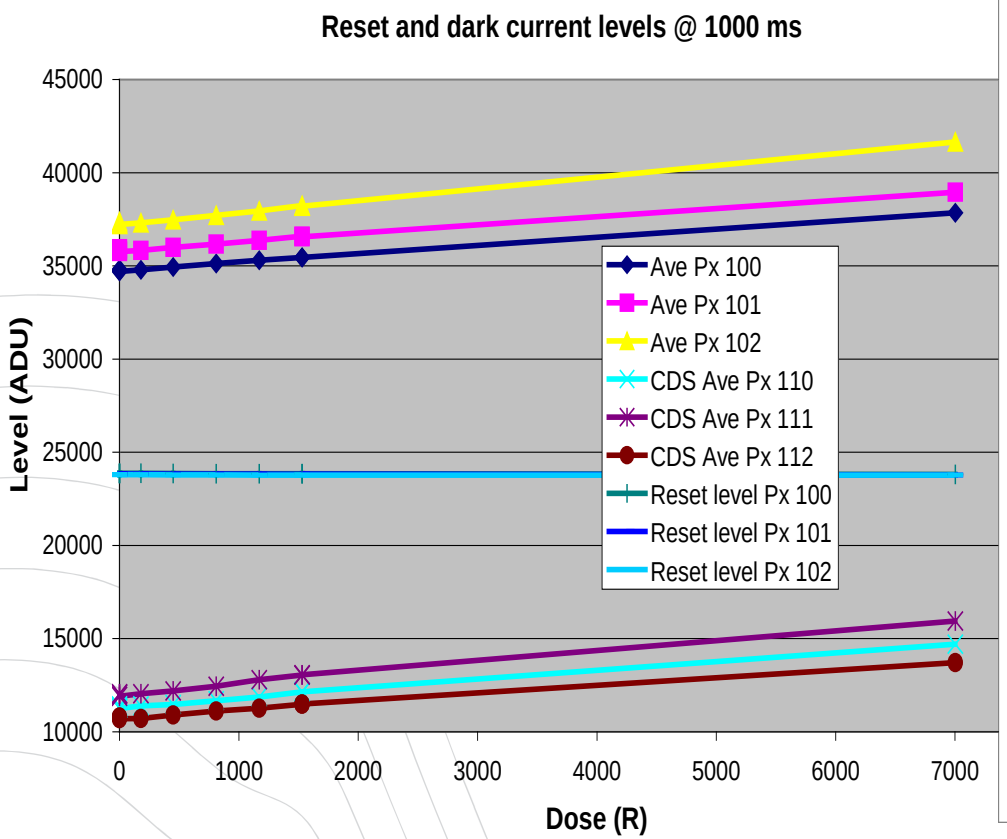

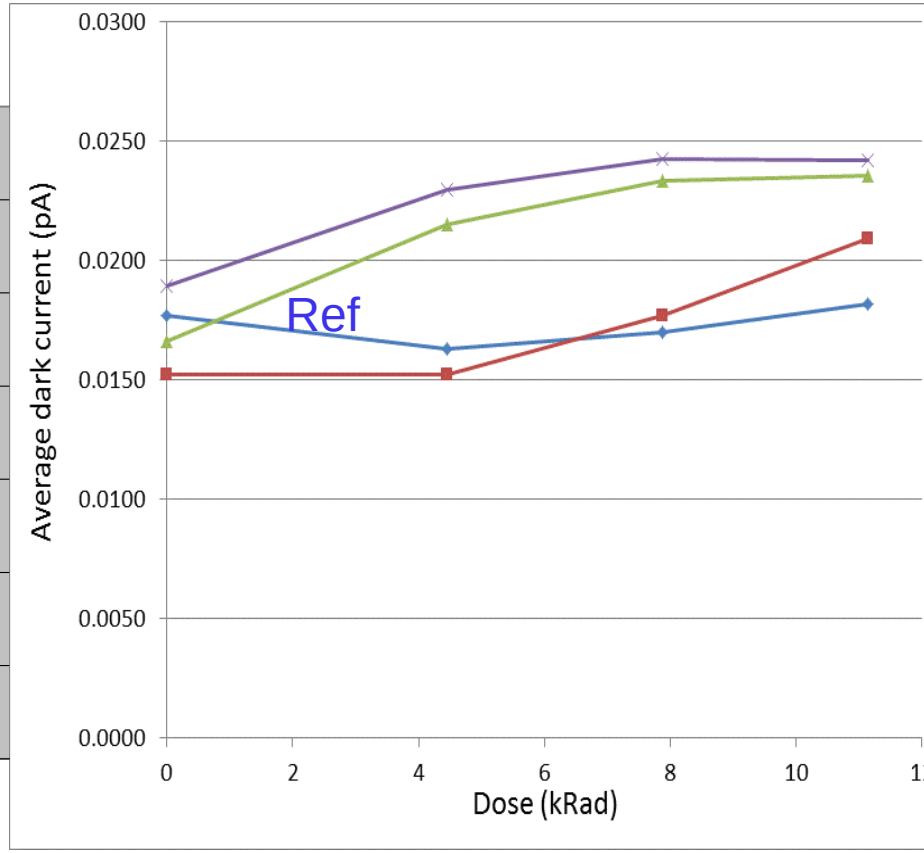

TID: Power + summary

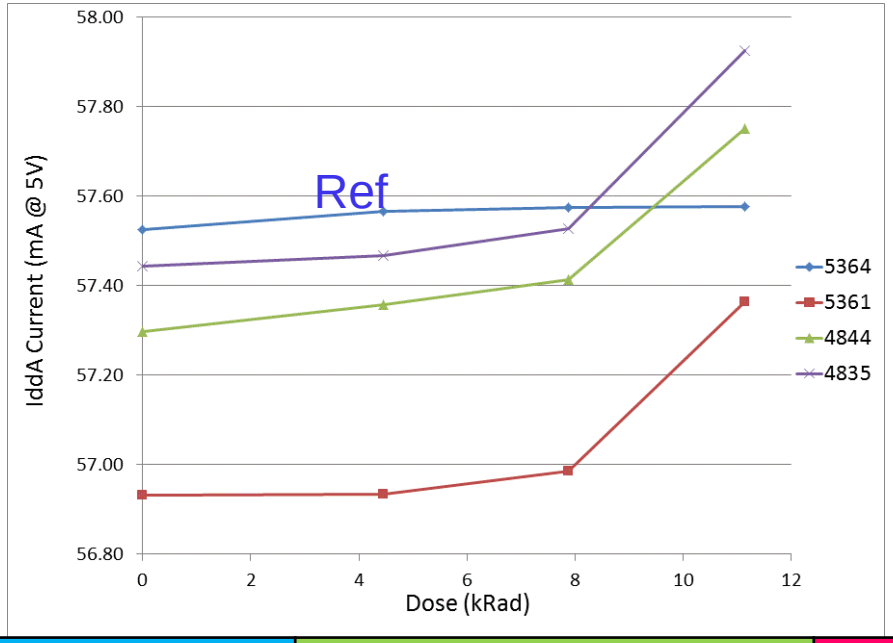

	RED				NIR				SWIR2			
	REF	5856	5861	5863	REF	5877	5885	5891	REF	4847	4858	4860
Noise	99%	99%	99%	99%	99%	100%	100%	99%	103%	97%	103%	103%
Idark	103%	145%	160%	160%	62%	157%	182%	147%	109%	104%	134%	93%
Lin	97%	93%	96%	90%	90%	95%	95%	96%	67%	97%	143%	125%

Proton: test conditions

- Element: p^+
- Fluence: 10^{10} p^+/cm^2
- High Energy:
  - 150 to 190 MeV
  - Possible Latch-up effects ➔ **NO Latch-ups observed**
  - Dark current change
- Low Energy:
  - 30 MeV
  - [$2.2.10^{-7}$ – $2.4.10^{-7}$] Rad(Si)/proton/cm^2 → 2.3 krad(Si)
  - Dark current change

Low energy Proton: dark current

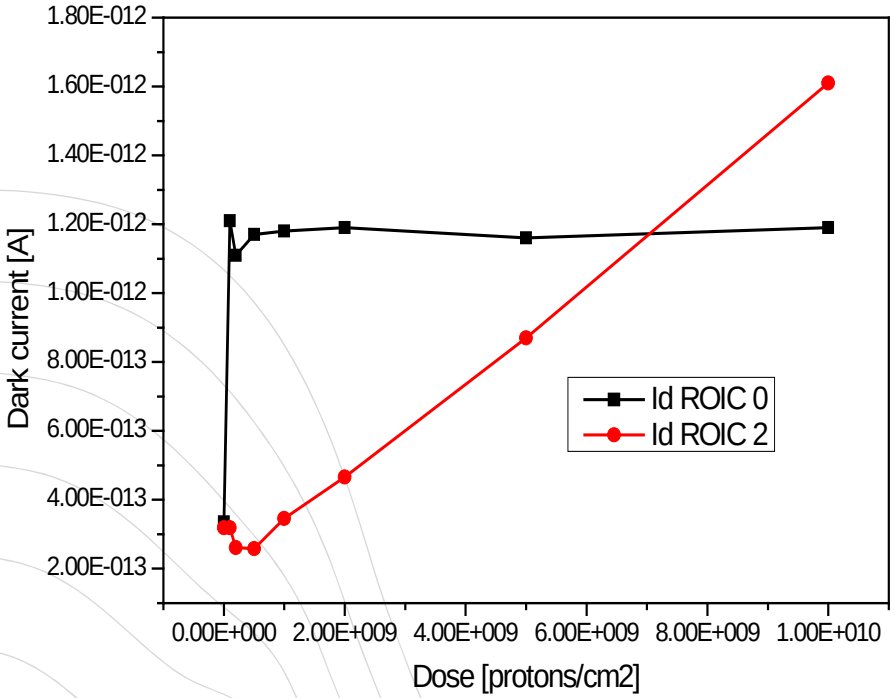

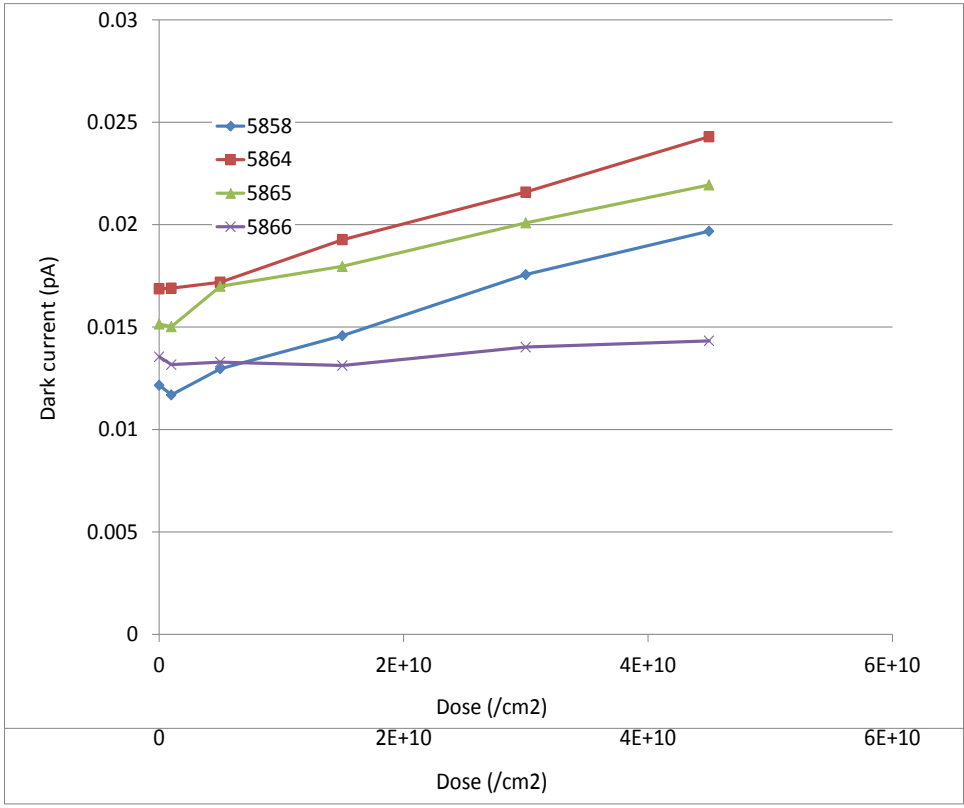

Low energy Protons: SWIR2

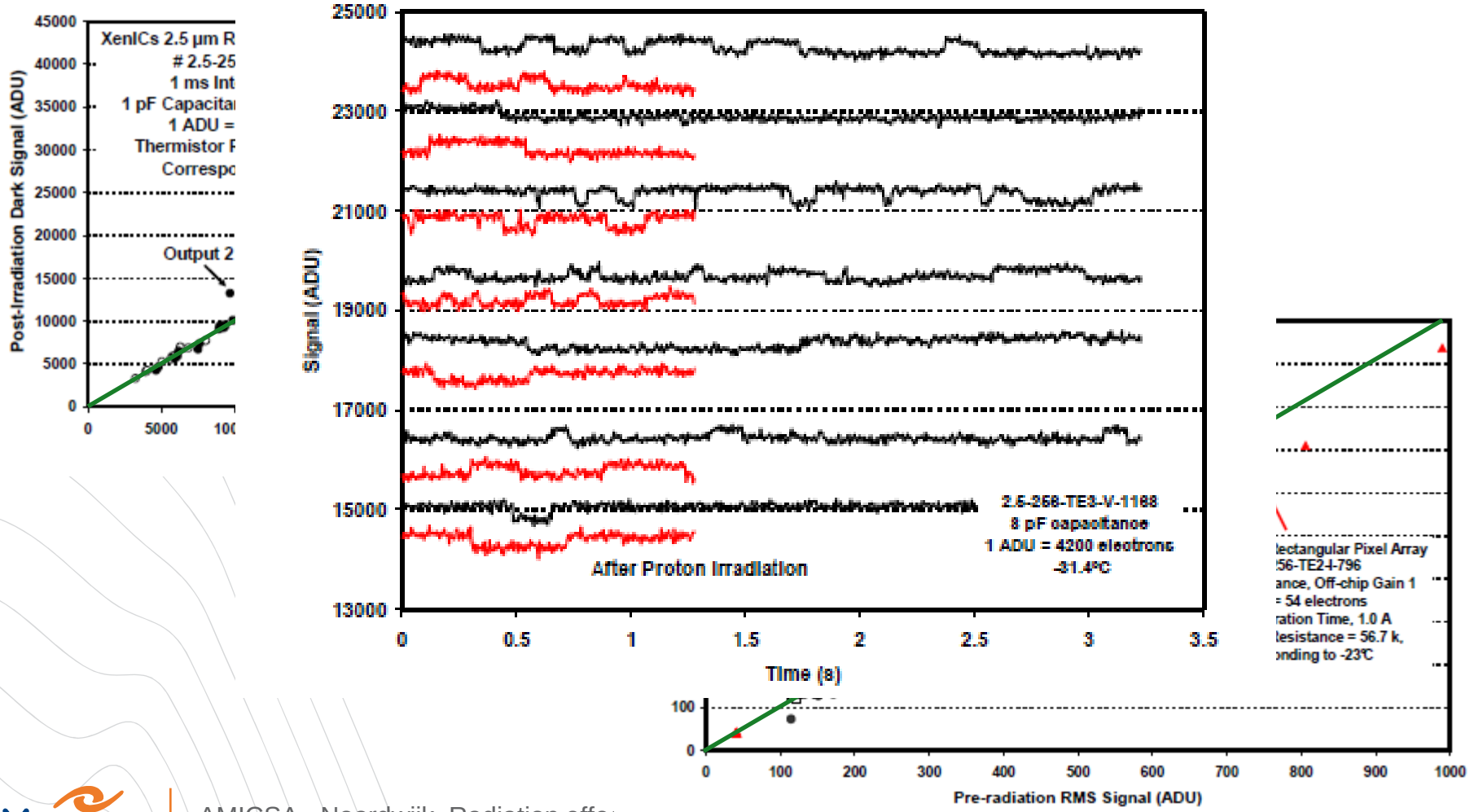

Heavy ions: test conditions

- Element: Ne, Ar, Kr and Xe ions
- Fluence: 10^7 ions/cm^2 or 175 SEEs
- LET (Linear Energy Transfer):
  - [6.20 – 67.70 MeV.cm^2/mg(Si)]
- Effects to be studied:
  - SEFI: Single Event Functional interrupts
  - Soft Latch-ups
  - Hard Latch-ups

Heavy Ions: SEFI

- Left most array irradiated
- Right bar: indication of the current

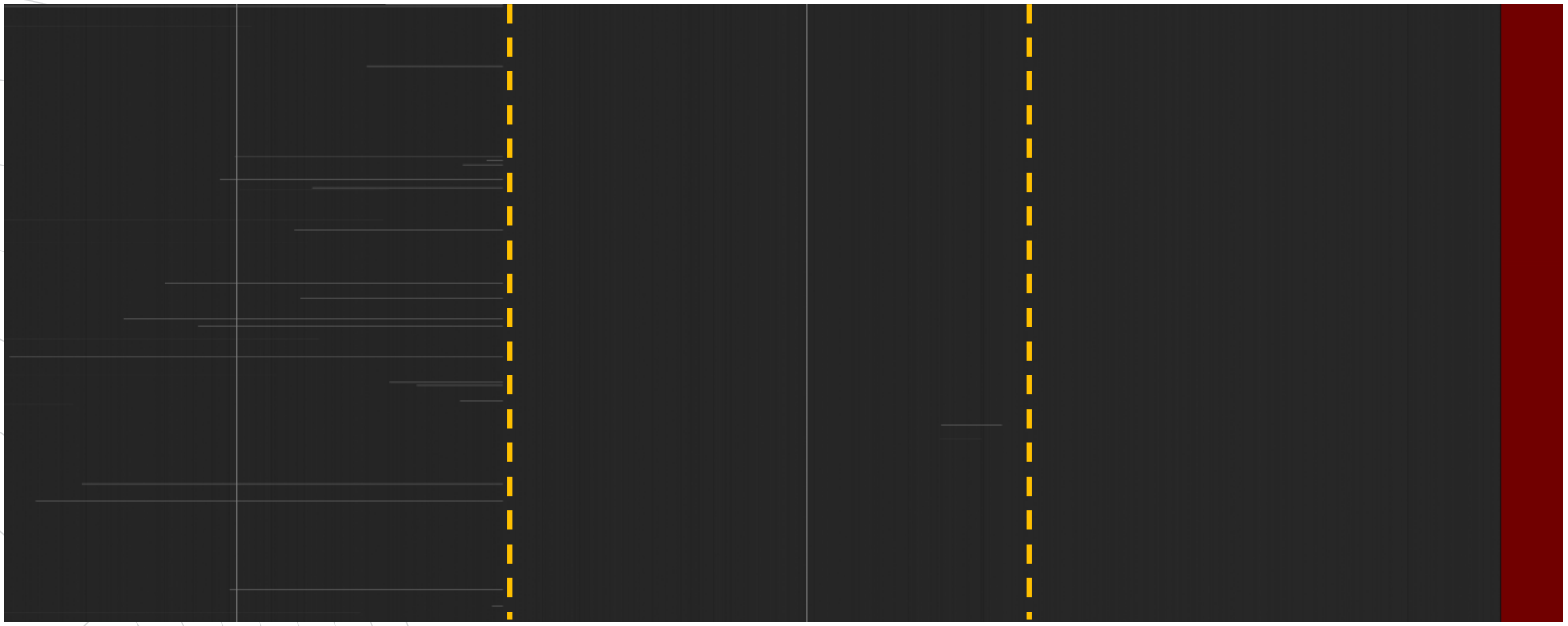

Heavy Ions: Latch-ups

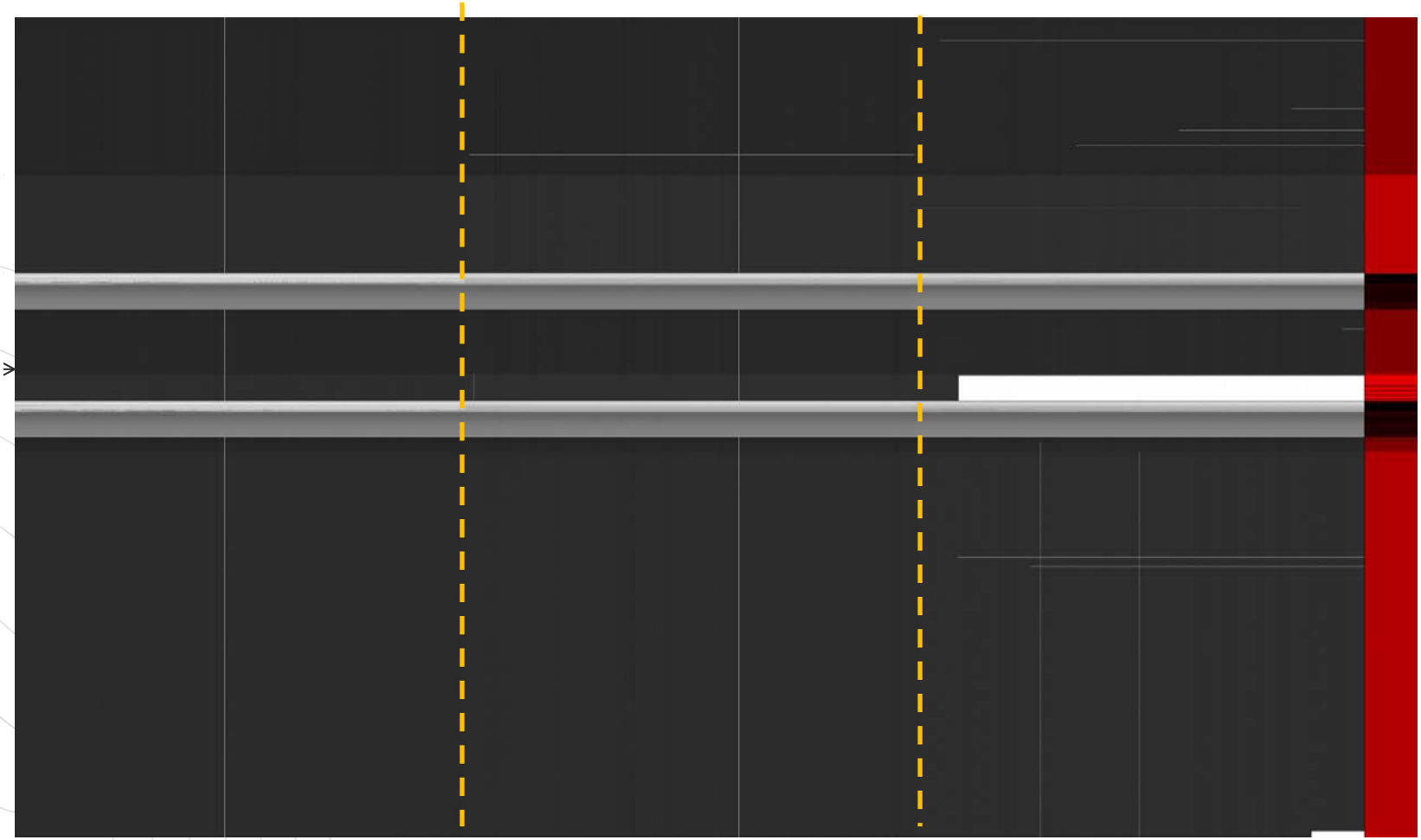

Heavy ion: cross-section

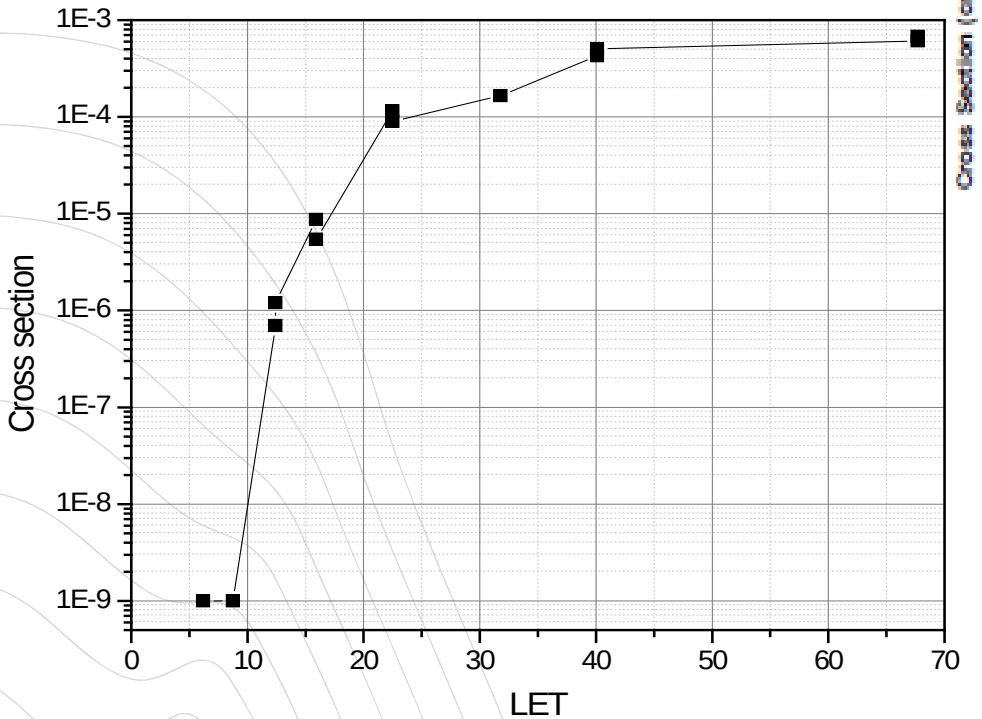

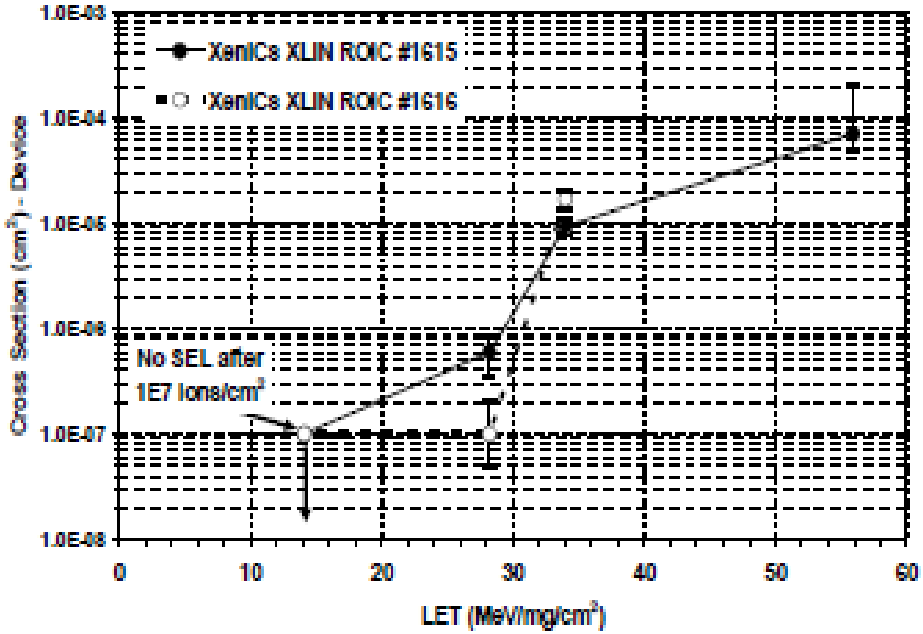

Discussion

- TID:
  - Affects detector, not ROIC
  - Most probably increase in G-R current
  - SWIR2: surface leakage current
- Protons:
  - **Low energy protons**: ➔ increase in Dark current → detector
  - Masked by low bias for MSI detectors
  - No increase in blinkers / RTN pixels seen
  - **High energy protons**: ➔ SEE → ROIC
  - No effect observed
- Heavy Ions:
  - Only affecting ROIC
  - Complex (digital) circuits are more vulnerable
  - Commercial circuit design, no precautions, BUT fully static

Overview

- Mission objectives
- FPA architecture
- ROIC designs
- Obtained results
  - TID
  - High and low E protons
  - Heavy ion
- Conclusions

Conclusions

- 3 different detector materials
- 2 different ROICs
- 2 different ROIC technologies

- TID: dark current increase
- Protons: dark current, NO blinkers
- Heavy ions: acceptable cross-section.

Questions ??